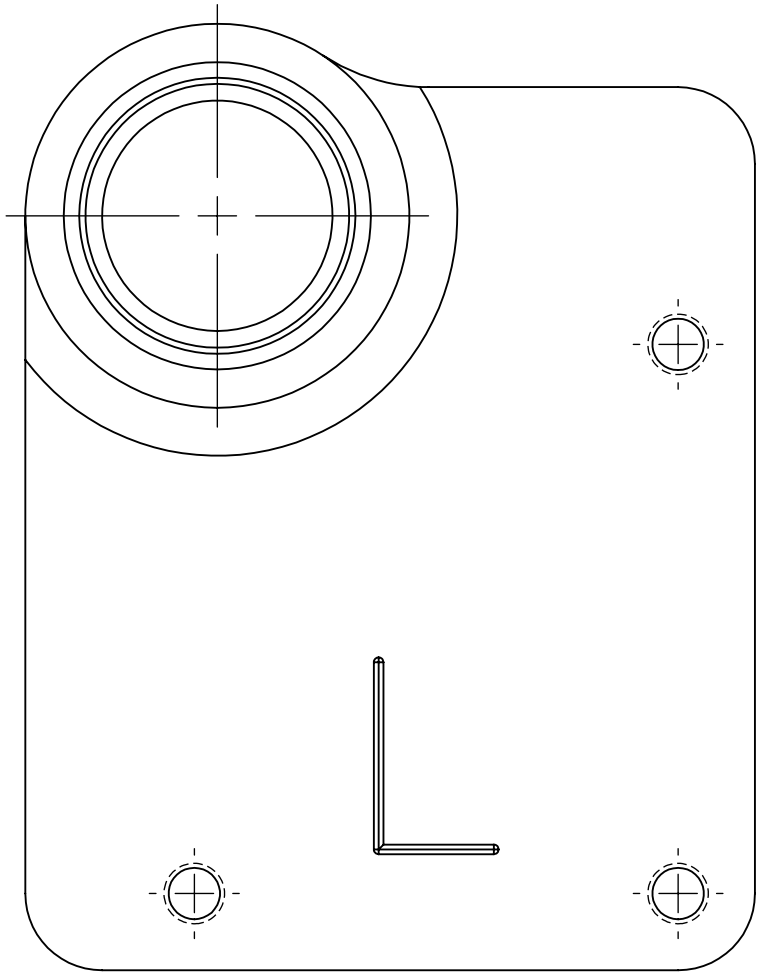
L

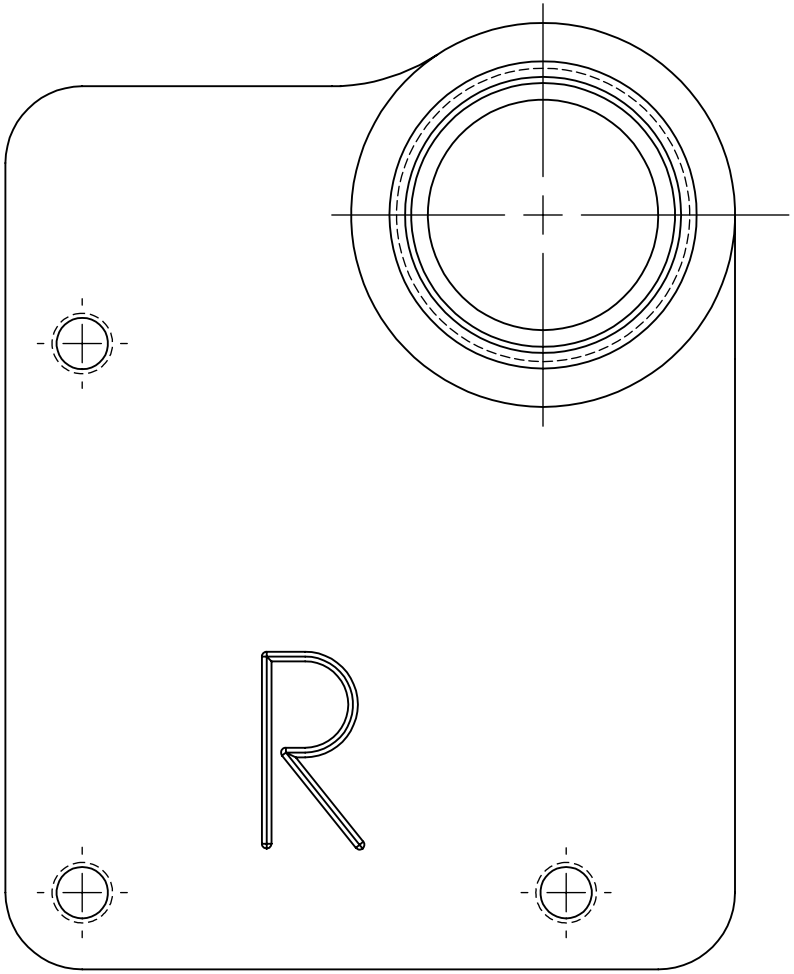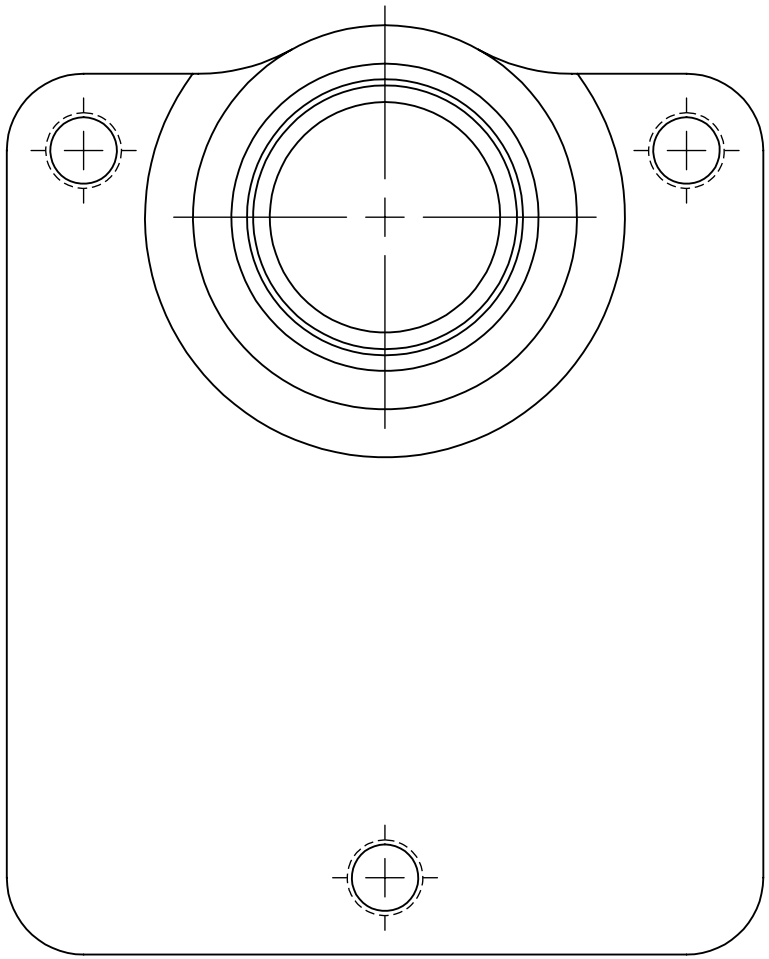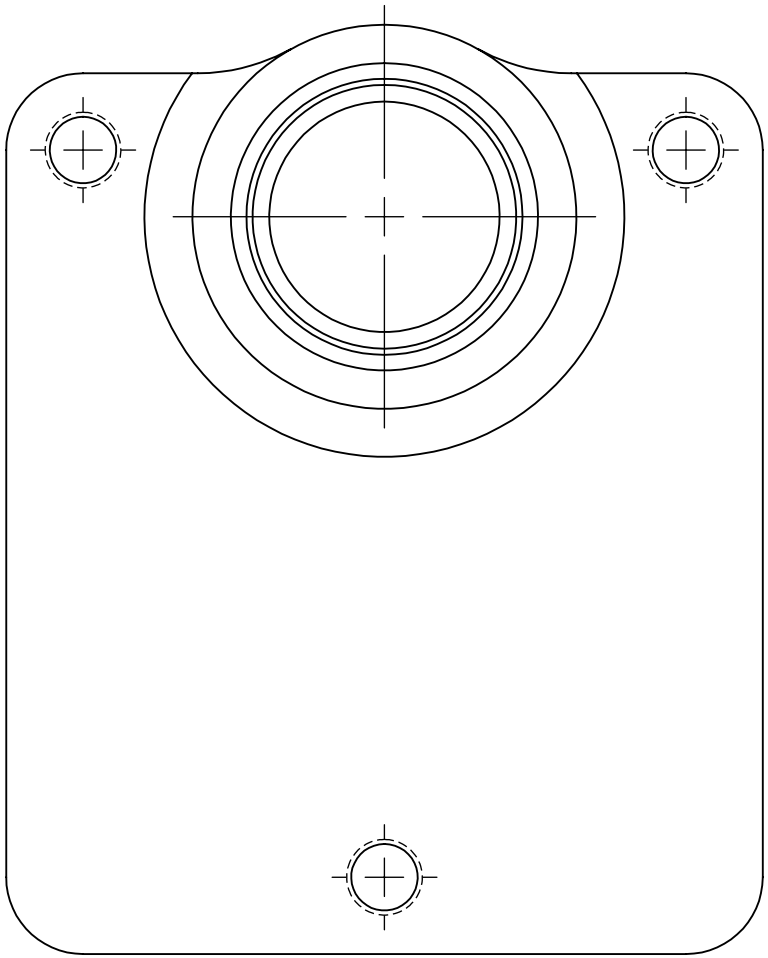
R